Technical Data Sheet

Date: 03/11/2022

5x32A CEE N. Surface Mount App. Inlet (With Cover)

Ref. No: 3107-313-1600



Pack Unit	Weight
5	325 gr.

Technical Informations

Ampere	32A
Voltage	380 - 415 V. AC
Hertz	50 - 60 Hz
Protection Class	IP 44
Clock Postion	6h
Number Of Poles	5 (3P + N + E)
Contact Material	Brass (CuZn)
Housing Material	PA6
Connection Type	Screw
Operation Temp. (-25 / + 40 IEC 60309)	-25 / +80 (1 hour -100° C)

Dimensions

a	96	**e**	26
b	102	**f**	152
c	84	**g**	103
d	56	**Øh**	5,3
Cable Diameter (Min.)	2,5 mm²	**M**	M32x1,5
Cable Diameter (Max.)	10 mm²		

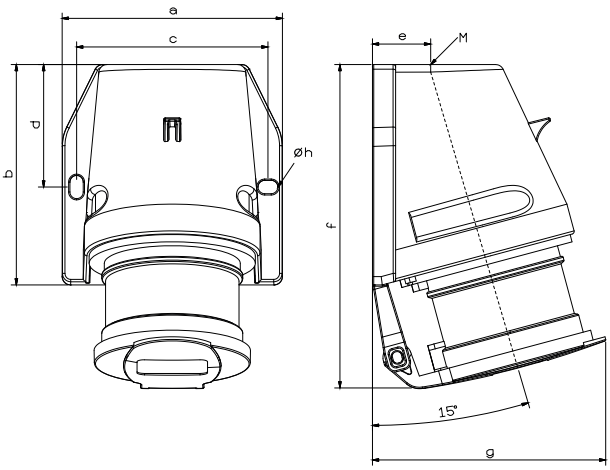

Different Earth Contact Positions (Clock Positions)

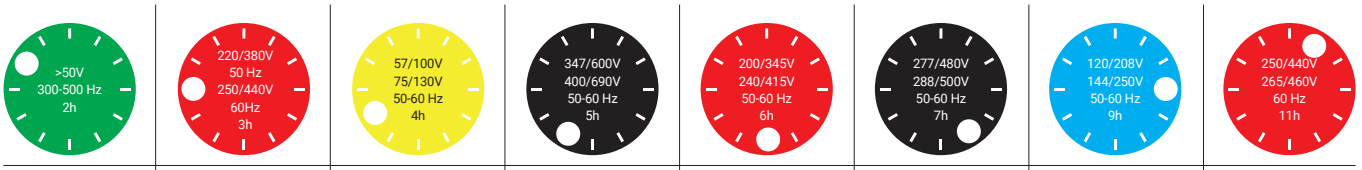

3107-313-1100-2h	3107-313-1600-3h	3107-313-0700-4h	3107-313-0300-5h	3107-313-1600	3107-313-0300-7h	3107-313-0900-9h	3107-313-1600-11h

Tel: +90 232 880 90 01
Fax: +90 232 880 90 02

info@tpelectric.com.tr

Kemalpaşa O.S.B. 600 Sk. No:364
35730 Kemalpaşa - İZMİR / TÜRKİYE