BigMak Electric LTD

info@bigmakelectric.com

15-17 Tintiava str. ,Dianabad, Sofia 1113,Bulgaria

+359 887 18 01 01

Bimetallic lug – long palm 2 holes

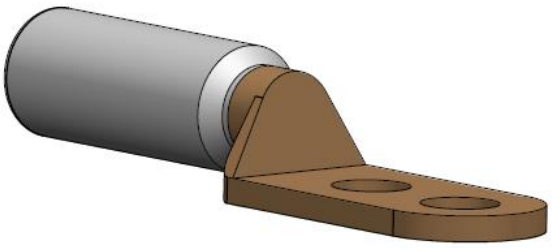

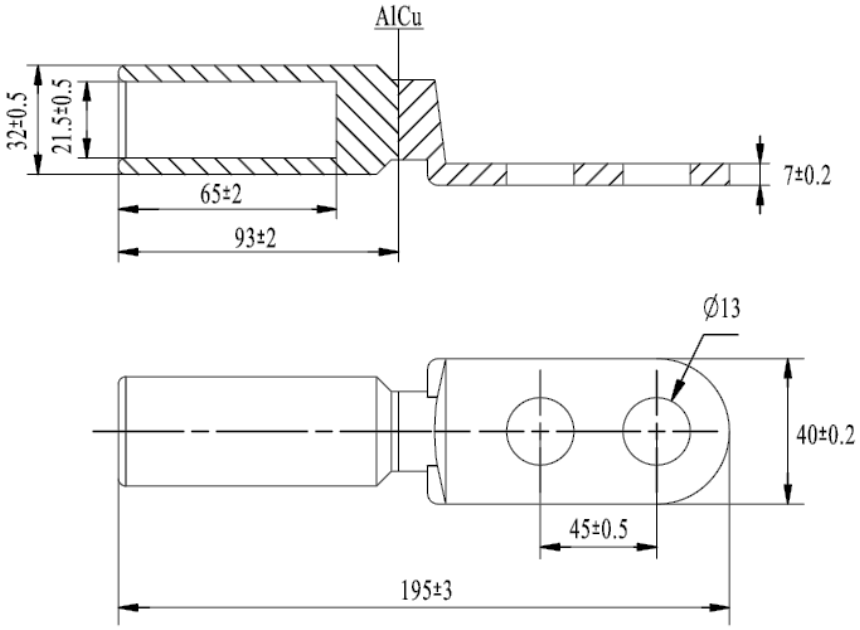

DATA SHEET

Order Code BIM-Al-Cu-240-M12x2

Range of cable cross section[mm^2]	**240 rm/sm**
Bolt diameter	**M12**
Material	**Barrel material** • **Aluminium - %99,60 pure Aluminum** **Palm material** • **Electrolytic copper %99,90 pure Copper**
Coat	**Natural Bright**
Joint	**Clamp Coupling**
Standart	**IEC61238-1**